MBRD30H300CT

Schottky Barrier Rectifiers

www.jshxm.com

■ Productor Character

- Multilayer Metal -Silicon Potential Structure.
- Low Leakage Current.
- High Current Capability, High Efficiency.
- High Junction Temperature Capability.
- RoHS Product.
- Compliance with EU REACH.

■ Primary Use

- Low Voltage High Frequency Switching Power Supply.
- Low Voltage High Frequency Invers Circuit.
- Low Voltage Continued Circuit and Protection Circuit.

■ Summarize

- MBRD30H300CT Device optimized for ultra-low forward voltage drop to maximize efficiency in Power Supply applications.

■ Equivalent Circuit

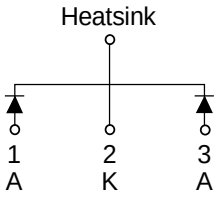

RoHS

Reach

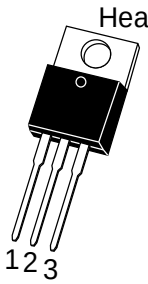

Package:TO-220AB

MBRD30H300CT

MBRD30H300CT-HF

HF=Halogen Free

Absolute Maximum Ratings(Ta=25°C unless otherwise noted)

Item		Symbol	Data	Unit
Maximal Inverted Repetitive Peak Voltage		V_{RRM}	300	V
Average Rectified Forward Current(Rated VR-20Khz Square Wave)-50% duty cycle	Per Device	I_{FAV}	30	A
	Per Diode		15	
Forward Peak Surge Current(Rated Load 8.3 Half Mssine Wave-According to JEDEC Method)	Per Diode	I_{FSM}	250	A
Operating Junction Temperature		T_J	-40～175	°C
Storage Temperature		T_{STG}	-40～175	°C
Typical Thermal Resistance(per leg)	Package=TO-220AB	$R_{\theta JC}$	2	°C/W

Electricity Character Per Diode(Ta=25°C unless otherwise noted)

Item	Test Condition	Value(min)	Value(typ)	Value(max)	Unit
V_B	Tj=25°C,IR=1mA	300	—	—	V
I_R	Tj=25°C,VR=300V	—	—	10	μA
	Tj=125°C,VR=300V	—	—	3	mA
V_F	Tj=25°C,IF=15A	—	0.89	0.95	V
	Tj=125°C,IF=15A	—	—	0.85	V
C_J	Tj=25°C,VR=4V,f=1MHz	—	155	—	pF

Typical Characteristics Curves

Fig1.Typical Forward Current and Forward Voltage

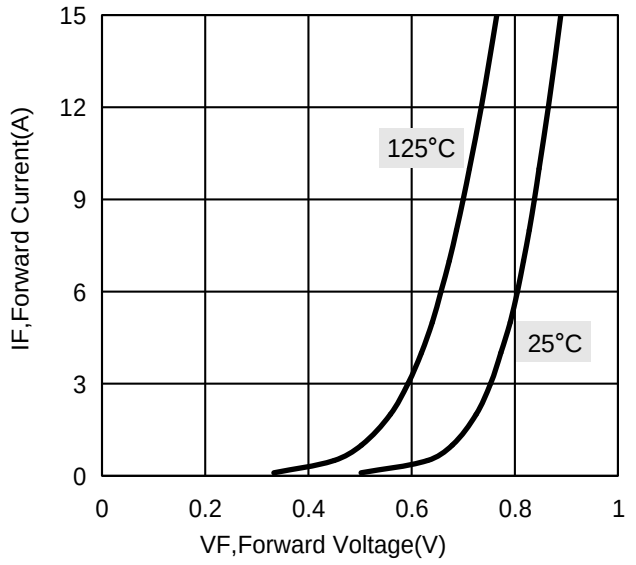

Fig2.Typical Current Derating Curve,Perelement

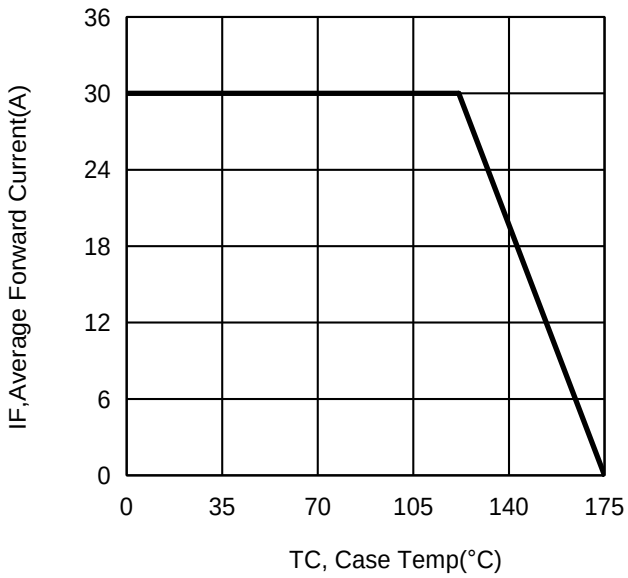

Fig3.Typical Reverse Current and Reverse Voltage

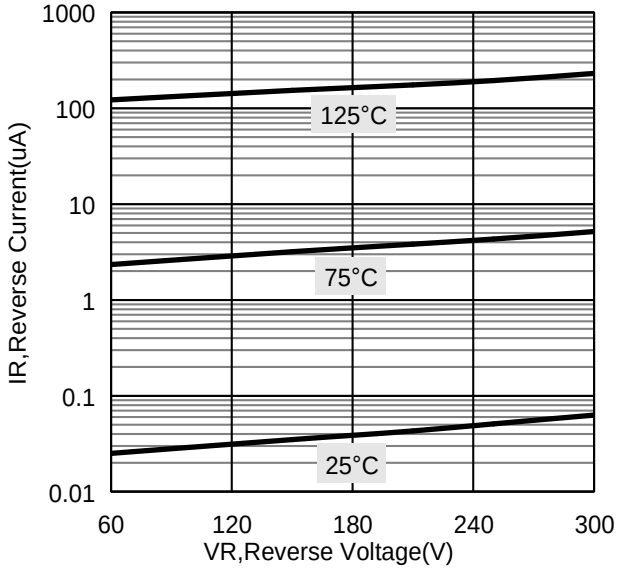

Fig4.Typical Junction Capacitance and Reverse Voltage

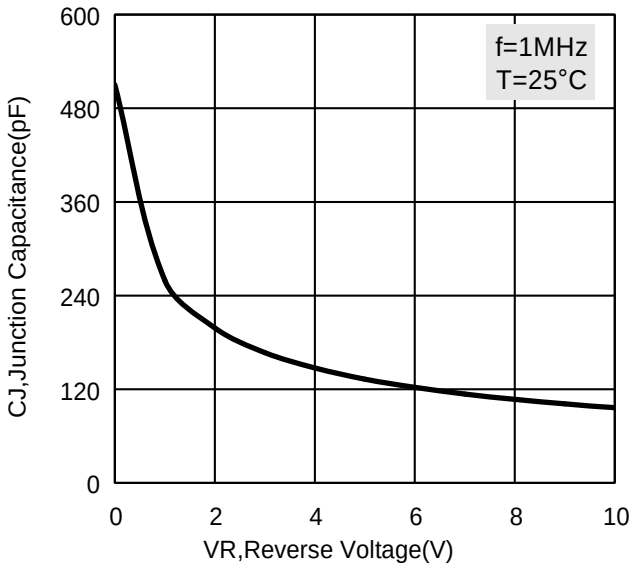

Package Outline Dimensions

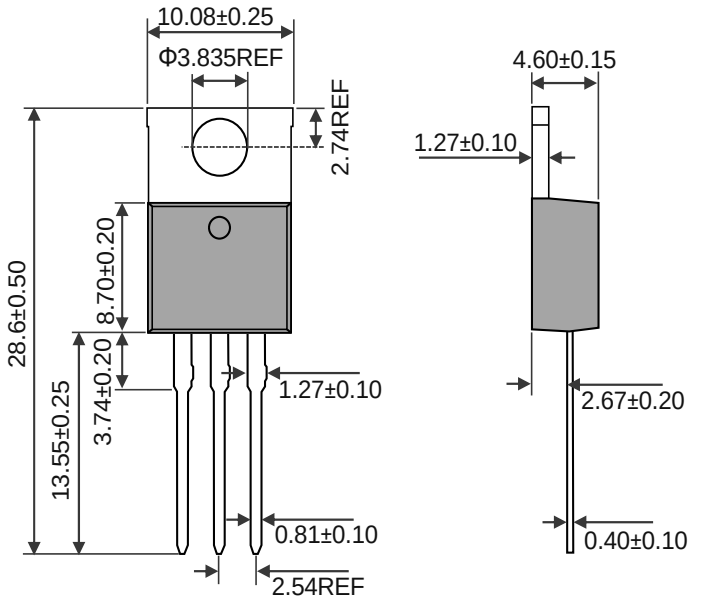

TO-220AB
Unit:mm

Marking Information

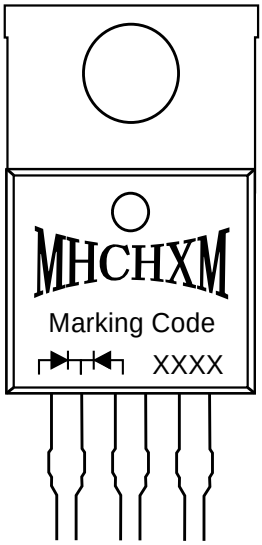

"MHCHXM"= Product Logo
"Marking Code"= The Following
"XXXX"= Date Code Marking

Marking Code	Part Number
MBRD30H300	MBRD30H300CT
	MBRD30H300CT-HF

Packing Information

Packaging	Part Number	Quantity(pcs)	Size(mm)
Tube	Tube	50	L534×W33×H7
	Inner Box	1000	L560×W150×H40
	Outer Box	5000	L580×W235×H175

Packaging:Tube

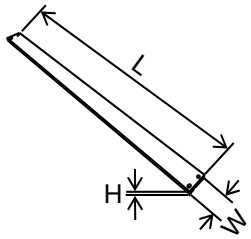

Tube

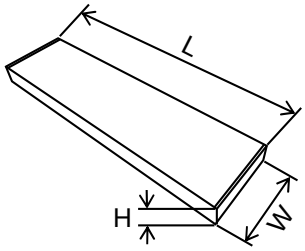

Tube Inner Box

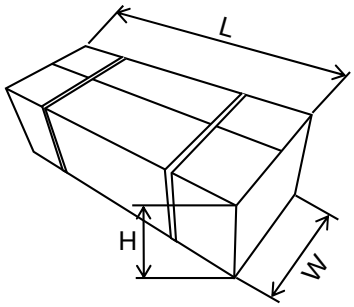

Tube Outer Box

Notes

Lead Forming

1.During lead frame bending, the lead frame should be bent at a distance more than 3mm from bottom of the epoxy.And the bending degree should not exceed 90°.
Note: The lead frame must be secured and do not touch the epoxy before bending to avoid damage to the transistor.In addition, when using a mold for a large number of lead molding, the structure of the fixed lead must be set, and it should be noted that the lead pressure rod structure cannot exert pressure on the epoxy resin body.

2. Do not bend the lead repeatedly. Do not bend the lead outward

Heat sink mounting

For power devices, in order to reduce junction temperature, heat dissipation blocks are usually used to disperse heat to the outside, and semiconductor power devices installed on the heat dissipation blocks can effectively dissipate heat without losing the reliability of the semiconductor, so the following matters should be noted when using:

1. Pay attention to the selection of silicone cream
In order to improve the thermal conductivity and heat dissipation effect of the device and the heat dissipation block, generally apply a thin layer of silicone grease evenly on the contact surface of the device and the heat dissipation block. Choose a silicone grease with low oil separation degree. Do not overapply it, otherwise it will attach too much stress to the resin.

2. Optimum torque is required
When using the fastening torque, pay attention not to use too much torque, so as not to damage the epoxy resin body, pay attention to the smooth cooling block body, no file chips and other foreign bodies between the transistor and the cooling block, pay attention to the selection of screws, nuts, gaskets and washers, so as not to cause damage to the transistor due to improper selection.

Soldering

1. Pay special attention to welding. When welding, the distance between the solder joint and the epoxy ball should be greater than 3mm, and it is recommended to weld it outside the tie rod base.

2. Avoid applying any pressure to the lead frame while the transistor is at high temperatures, especially when welding. Dip welding and manual welding should not be done more than once

Notes:

For specific precautions, please refer to our company's relevant technical documents or visit our official website at **http://www.jshxm.com**

DISCLAIMER

1.Above specification may be changed without notice. MHCHXM will reserve authority on material change for above specification.

2.The graphs shown in this datasheet are representing typical data only and do not show guaranteed values.

3.When using this product, please observe the absolute maximum ratings and the instructions for use outlined in these specification sheets. MHCHXM assumes no responsibility for any damage resulting from use of the product which does not comply with the absolute maximum ratings and the instructions included in these specification sheets.

4.These specification sheets include materials protected under copyright of MHCHXM. Reproduction in any form is prohibited without the specific consent of MHCHXM.

5.This product is not intended to be used for military, aircraft, automotive, medical, life sustaining or life saving applications or any other application which can result in human injury or death. Please contact authorized MHCHXM sales agent for special application request.

6.Statements regarding the suitability of products for certain types of applications are based on MHCHXM's knowledge of typical requirements that are often placed on MHCHXM products in generic applications. Such statements are not binding statements about the suitability of products for a particular application. It is the customer's responsibility to validate that a particular product with the properties described in the product specification is suitable for use in a particular application. Parameters provided in datasheets and/or specifications may vary in different applications and performance may vary over time. All operating parameters, including typical parameters, must be validated for each customer application by the customer's technical experts. Product specifications do not expand or otherwise modify MHCHXM's terms and conditions of purchase, including but not limited to the warranty expressed therein.

7.This publication supersedes & replaces all information previously supplied. For additional application information, please visit our website **http://www.jshxm.com** , or consult your nearest MHCHXM's sales office for further assistance.